DRAWING MADE IN THIRD ANGLE PROJECTION

USED ON

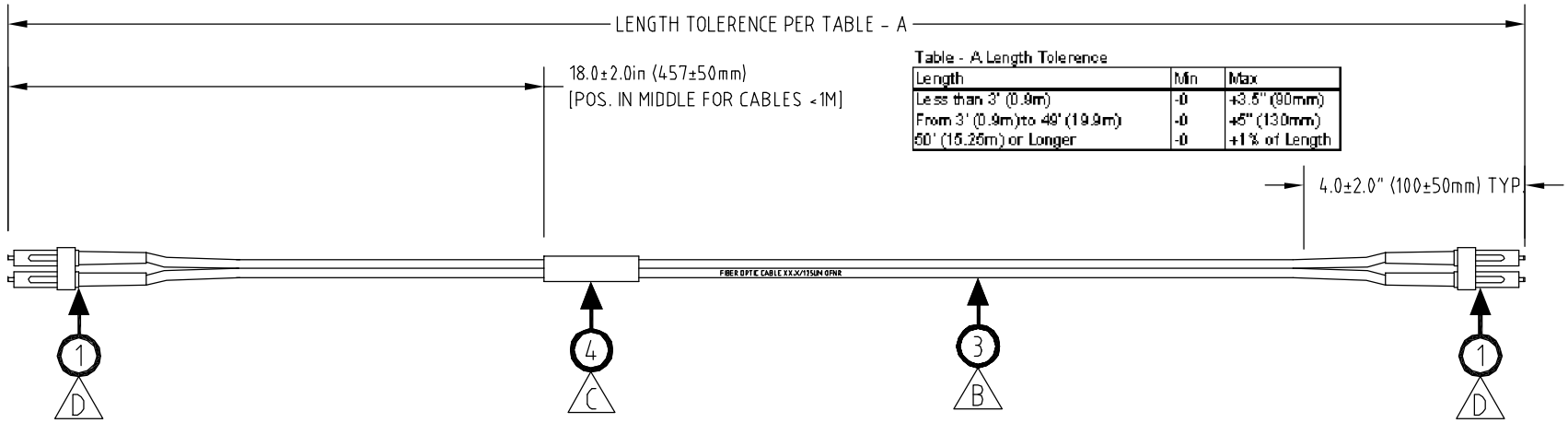

Table - A Length Tolerence

Length	Min	Max
Less than 3' (0.9m)	-0	+3.5" (90mm)
From 3' (0.9m) to 49' (19.9m)	-0	+5" (130mm)
50' (15.25m) or Longer	-0	+1% of Length

14/1 LC - LC PATCHCORD
NOT TO SCALE
CERAMIC CONNECTORS

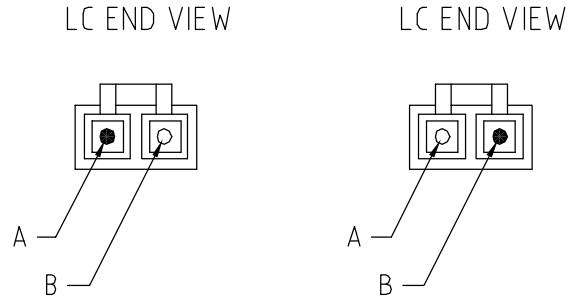

14/2 LC - LC POLAIRITY DIAGRAM
STANDARD A - B CONFIGURATION

A ACTUAL ASSEMBLY DETAILS MAY DIFFER SLIGHTLY FROM THE DRAWING REPRESENTATION.

B EXACT FIBER MARKING AND MARKING ORIENTATION IS SHOWN FOR REFRENCE ONLY AND IS UNSPECIFIED. HOWEVER, FIBER CORE AND UL RATING WILL ALWAYS BE LISTED

C BARCODE LABEL IS PRINTED WITH FCA SERIAL NUMBER IN I-2of5 FORMAT, AND INCLUDES HUMAN READABLE TEXT.

D STRAIN RELIEF BOOTS WHICH ARE NOT OVERMOLDED WILL BE ADHERED TO CONNECTOR CRIMP AND FIBER JACKET AND ARE NOT INTENDED TO BE REMOVABLE.

PROJECTION

#	PART NUMBER	QTY	DESCRIPTION	NOTES
4	-	1 ea.	SERIAL NUMBER LABEL	-
3	B22P1	SP	ORANGE, DUPLEX, PVC ZIPCORD, 62.5/125um	-
2	-	-	-	-
1	Z6D3	2	LC DUPLEX CERAMIC CONNECTOR	-

ORD: -

P	F	LTR	REVISION RECORD	APP	DATE

DIMENSIONS IN: IN
—

DO NOT SCALE PRINT.
TOLERANCES UNLESS OTHERWISE SPECIFIED:
2 PLC DEC ± N/A
3 PLC DEC ± N/A
4 PLC DEC ± N/A
ANGLES ±
SURF TEXTURE: N/A

MATERIAL | HEAT TREAT | FINISH

DR JME 14/12 | APP | CHK | REL

SALES RELEASE SPEC

NAME LC / LC CERAMIC DUPLEX 62.5/125um PATCHCORD

SCALE NONE | PART NO V662P2xxM | SHEET 14 OF 68 | REV A

EF MASTER